SR SUNTOUR

# SF12RAIDON-X2-DS-RL-R-air-120

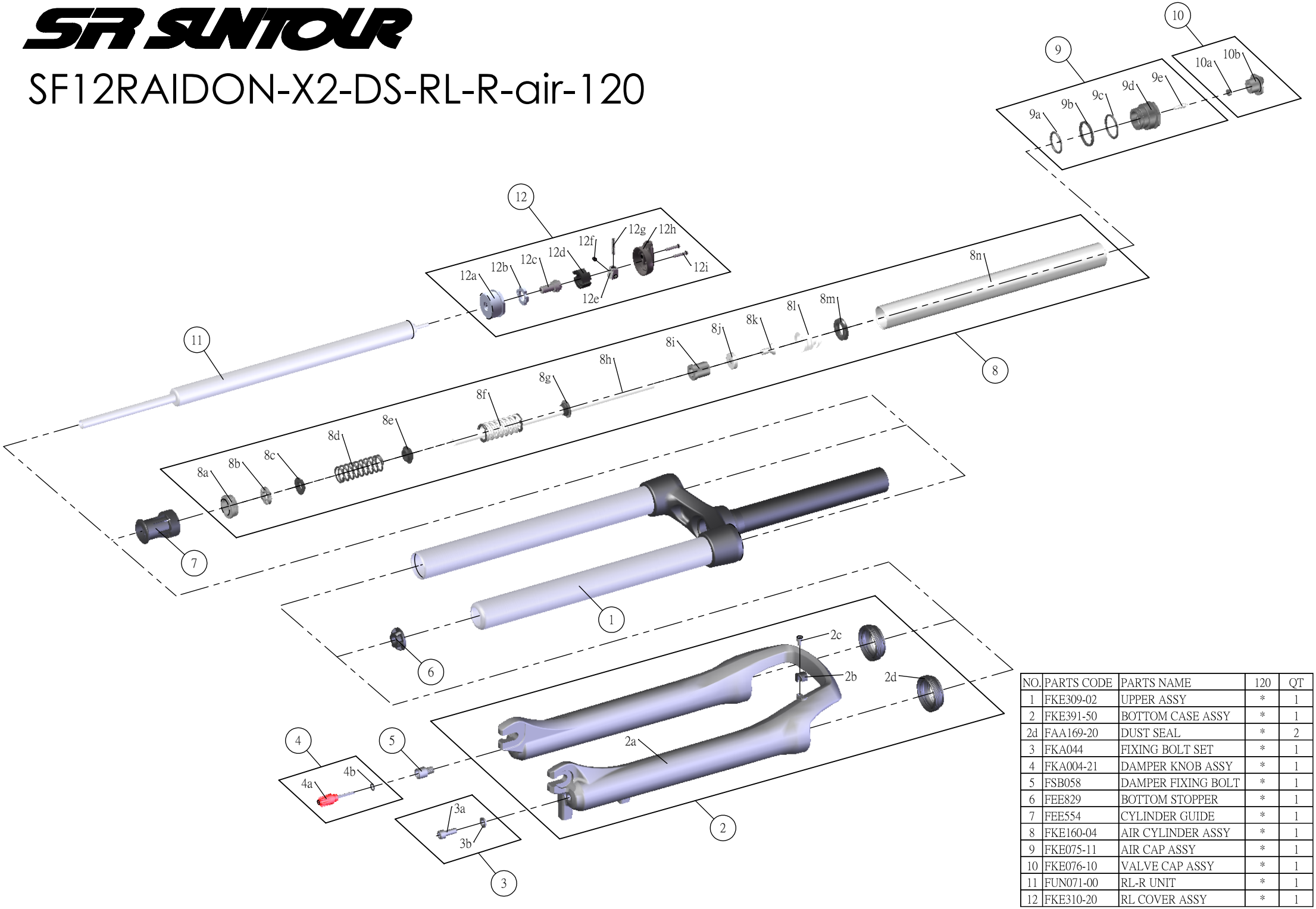


| NO. | PARTS CODE | PARTS NAME | 120 | QT |
|---|---|---|---|---|
| 1 | FKE309-02 | UPPER ASSY | * | 1 |
| 2 | FKE391-50 | BOTTOM CASE ASSY | * | 1 |
| 2d | FAA169-20 | DUST SEAL | * | 2 |
| 3 | FKA044 | FIXING BOLT SET | * | 1 |
| 4 | FKA004-21 | DAMPER KNOB ASSY | * | 1 |
| 5 | FSB058 | DAMPER FIXING BOLT | * | 1 |
| 6 | FEE829 | BOTTOM STOPPER | * | 1 |
| 7 | FEE554 | CYLINDER GUIDE | * | 1 |
| 8 | FKE160-04 | AIR CYLINDER ASSY | * | 1 |
| 9 | FKE075-11 | AIR CAP ASSY | * | 1 |
| 10 | FKE076-10 | VALVE CAP ASSY | * | 1 |
| 11 | FUN071-00 | RL-R UNIT | * | 1 |
| 12 | FKE310-20 | RL COVER ASSY | * | 1 |