SF12RAIDON-X2-DS-LO-R-air-15QLC-120

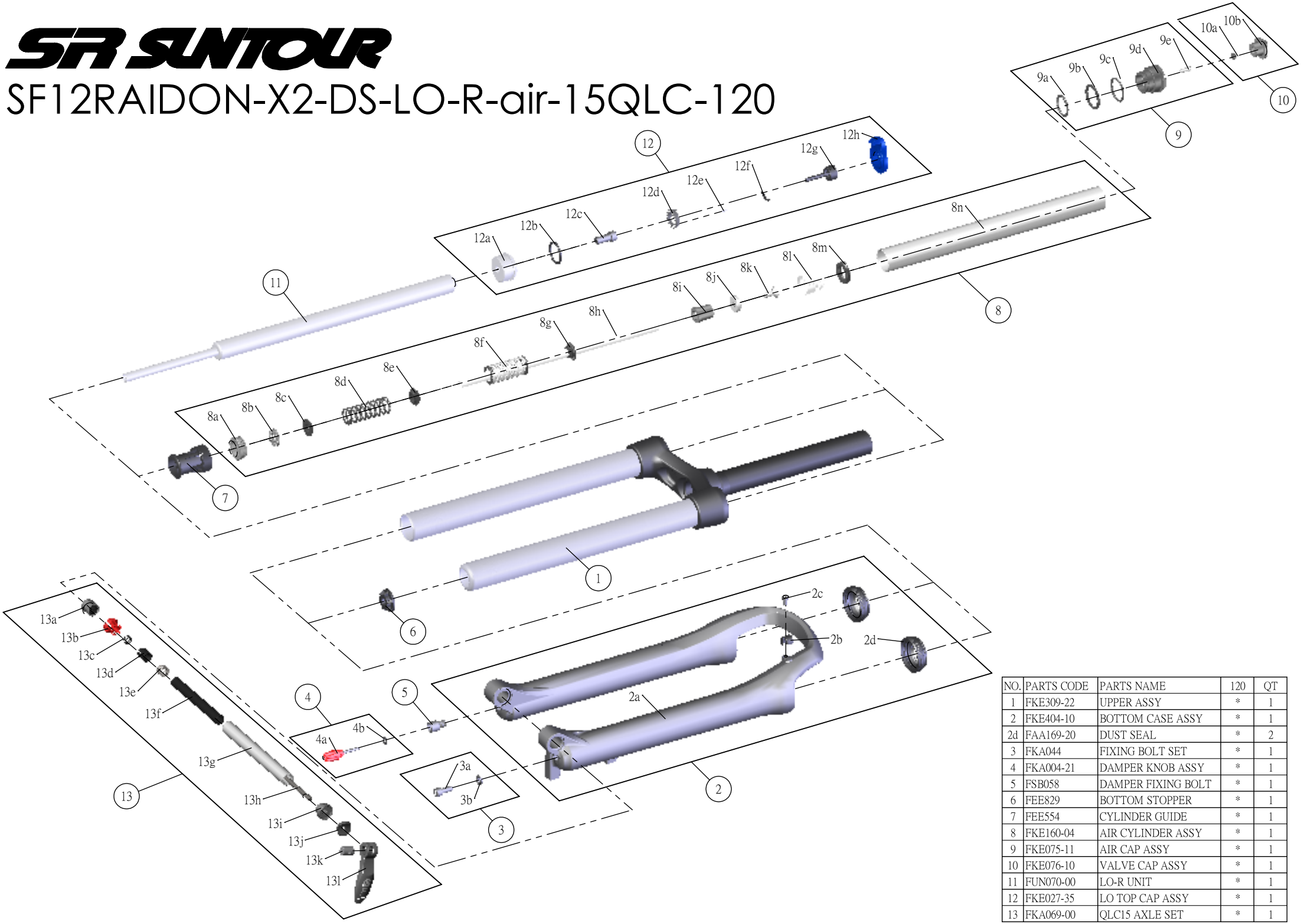

NO.	PARTS CODE	PARTS NAME	120	QT
1	FKE309-22	UPPER ASSY	*	1
2	FKE404-10	BOTTOM CASE ASSY	*	1
2d	FAA169-20	DUST SEAL	*	2
3	FKA044	FIXING BOLT SET	*	1
4	FKA004-21	DAMPER KNOB ASSY	*	1
5	FSB058	DAMPER FIXING BOLT	*	1
6	FEE829	BOTTOM STOPPER	*	1
7	FEE554	CYLINDER GUIDE	*	1
8	FKE160-04	AIR CYLINDER ASSY	*	1
9	FKE075-11	AIR CAP ASSY	*	1
10	FKE076-10	VALVE CAP ASSY	*	1
11	FUN070-00	LO-R UNIT	*	1
12	FKE027-35	LO TOP CAP ASSY	*	1
13	FKA069-00	QLC15 AXLE SET	*	1