SR SUNTOUR

SF12AXON RL-R lite-TS

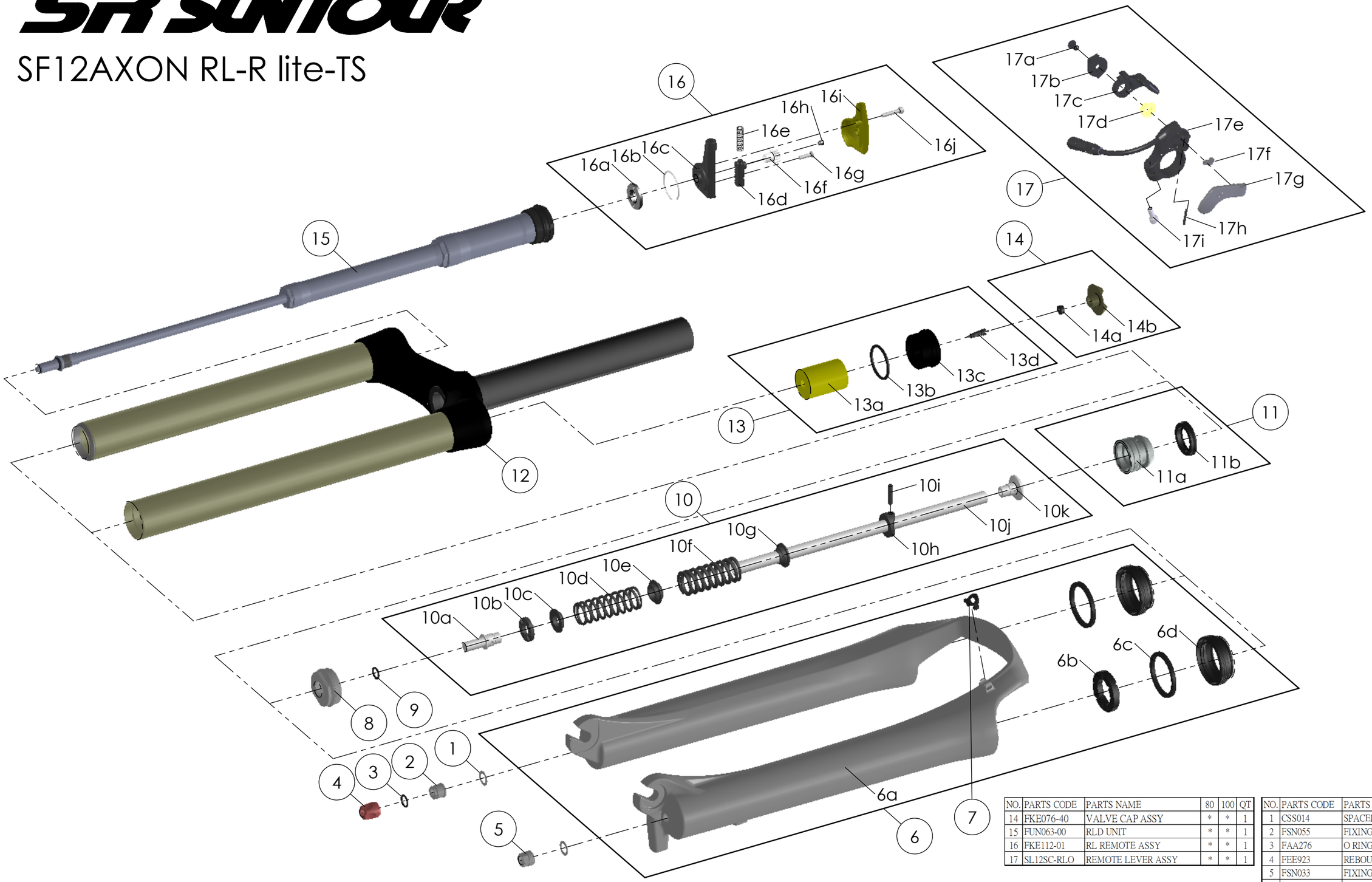

NO.	PARTS CODE	PARTS NAME	80	100	QT
14	FKE076-40	VALVE CAP ASSY	*	*	1
15	FUN063-00	RLD UNIT	*	*	1
16	FKE112-01	RL REMOTE ASSY	*	*	1
17	SL12SC-RLO	REMOTE LEVER ASSY	*	*	1

NO.	PARTS CODE	PARTS NAME	80	100	QT
1	CSS014	SPACER	*	*	2
2	FSN055	FIXING NUT	*	*	1
3	FAA276	O RING	*	*	1
4	FEE923	REBOUND KNOB	*	*	1
5	FSN033	FIXING NUT	*	*	1
6	FKE432-08	BOTTOM CASE ASSY	*	*	1
6b	FEP233-10	BOTTOM BUMPER	*	*	1
6c	FAA207	OIL WIPER	*	*	2
6d	FAA169	DUST SEAL	*	*	2
7	FEG034	CABLE CLIP	*	*	1
8	FEE243-20	FORK NOSE	*	*	1
9	FAA175	O RING	*	*	1
10	FKE115-10	SUPPORT TUBE ASSY	*		1
	FKE115-00			*	1
11	FKA022-20	PISTON UNIT	*	*	1
12	FKE437-03	UPPER ASSY	*	*	1
13	FKE075-24	AIR CAP ASSY	*	*	1